Increasing thermal efficiency with liquid cooling

The HP Z400 and Z800 Workstations employ an innovative liquid cooling system that further reduces noise while maintaining high levels of performance.

Table of contents

Introduction

Personal workstations have provided users with substantial increases in processing power over the past decade. Increases in memory size, graphics capability and hard drive capacity, and much higher processor performance have all contributed to creating much more powerful desktop and deskside systems.

However, the beneficial increases in capabilities have also increased power requirements, with a corresponding increase in generated heat. To combat the increased heat, cooling systems (mostly fans) have been added to dissipate the internal heat to the environment outside of the cabinet. The addition of fans generates noise—noise that can be irritating to users, reducing productivity.

HP places great emphasis on employing the latest technology in HP Z Workstations, and noise reduction is no exception. HP employs innovative technology to reduce noise levels in its workstations, ensuring high performance alongside acoustic noise emissions. While HP Z Workstations are already quieter than their predecessors, the introduction of liquid cooling in the HP Z400 and HP Z800 Workstations is the latest innovation from HP to further reduce noise levels. This paper will examine this technology and discuss the acoustic benefits of a quieter and more efficient cooling system.

Power and noise in workstations

In a typical personal workstation, processors are one of the biggest factors in increased system heat. Early desktop systems were based on a single processor that had a few thousand transistors and generated less than 10W of heat (Figure 1). Such systems required little or no electromechanical cooling; natural convection of ambient air was sufficient to keep components within operating range.

Current processors are composed of hundreds of millions of transistors, and can generate more than 130W of heat. Systems with multiple processors, hard drives, I/O and graphics cards, plus several gigabytes of memory, require an even higher volume of moving air to stay cool. The fans used to move this increased amount of air create noise.

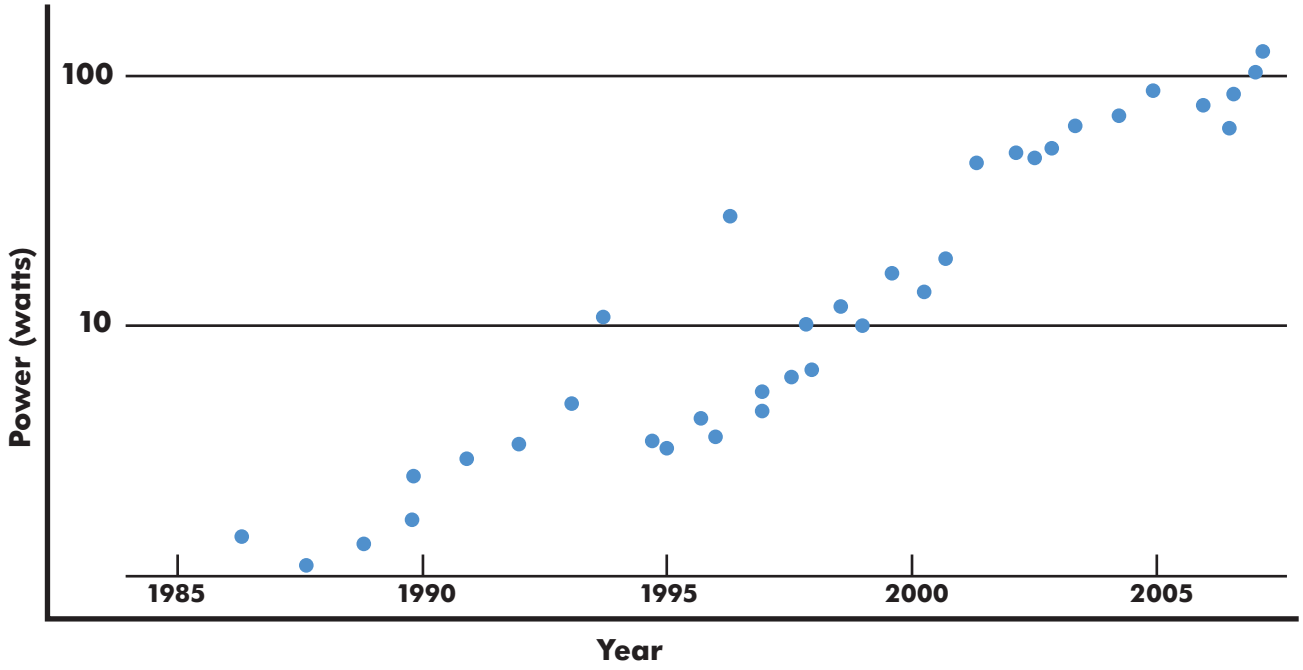

Figure 1. Increasing power requirements for off-the-shelf microprocessors[1]

1 Sources: http://www.amd.com/US/PRODUCTS/Pages/products.aspx; http://www.intel.com/support/product.htm

What is acoustic noise?

Acoustic noise is pressure waves produced by a vibrating source. The pressure waves are detected and translated into electrical signals by the human ear. Noise is generally regarded as an irregular vibration, as opposed to a tone (which is a sinusoidal wave) or a sound (which is a combination of several tones).

There are two ways to measure the "loudness" of a sound: acoustic power and acoustic pressure. Acoustic power is the total amount of sound energy radiated by a sound source over a specific period and is usually expressed in watts (W). Acoustic pressure is the pressure generated by sound waves at a given point in space and is usually specified in microbars or Pascals (Pa). Sound power is more of an engineering-oriented measurement, whereas sound pressure is directly perceived by humans. This paper will use sound pressure as the measurement of "loudness." Both measurements are typically expressed relative to an agreed reference level (as opposed to absolute levels). The unit of measure used to express these relative sound levels is the bel or decibel (dB) (one bel equals ten decibels). The bel and decibel are both measured on a logarithmic scale.

An increase of three decibels in sound pressure is roughly a doubling of pressure; an increase of ten decibels is ten times the sound pressure. However, humans do not perceive the absolute pressure increase—an increase of three decibels is perceived as roughly a 20% increase and an increase of ten decibels as roughly a doubling (Figure 2). For quiet office workers, computers over 35 dB are typically distracting.

The human perception of sound is quite complex, combining both amplitude and tonal aspects (frequency, type of waveform and perturbations) into the total perceived loudness. Ultimately, a reduction of perceived loudness requires a reduction in the amplitude and changes to the tonal aspects of the resulting sound.

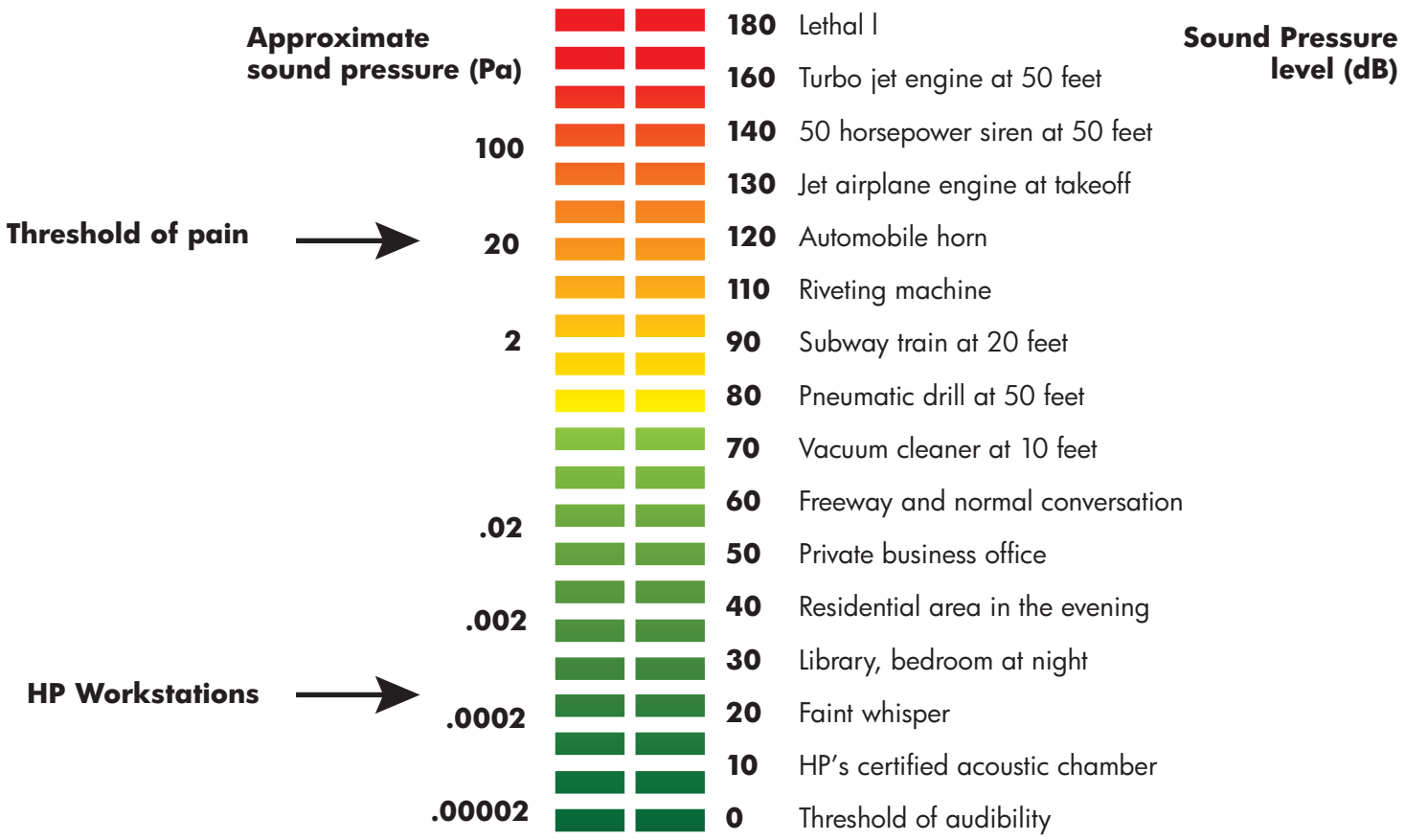

Figure 2. A popular scale of sound pressure levels[2]

2 Based on http://www.osha.gov/dts/osta/otm/noise/health_effects/soundpropagation.html

Acoustic noise in personal workstations

There are multiple sources of noise in personal workstations, including:

- Fans
- Hard disk drives (HDDs)
- Optical disk drives
- Other noises (e.g., liquid cooling pump, keyboards, etc.)

Fans and high-speed (15K rpm) HDD are typically the strongest source of acoustic noise in a workstation[3]. Workstations generally contain multiple fans—fans to exhaust air from the interior of the box, fans (blowers) on graphics cards, and fans on the processor and/or chipset heatsink(s). Multiple mechanisms cause noise in fans: friction in the bearing, turbulence of the exit air, pressure variations created by the impeller blades, and motor switching (clicking noise in 3-wire fans).

Reducing fan-generated noise emitted from a workstation involves lowering the amount of generated heat (and thus decreasing the amount of airflow required), or making the cooling mechanisms more efficient (such as having larger heatsinks and slower fan speeds). Reducing the generated heat, while possible, is typically unacceptable. For example reducing heat by lowering the processor frequency results in lower performance. Increasing the efficiency of voltage regulators can reduce the amount of waste power (up to 10%), but also adds cost to the system.

Consequently, more efficient cooling mechanisms are often the most effective way to achieve lower acoustics. This can include material changes, additional ducting, or larger heatsinks.

HP Z Workstation liquid cooling solutions

The HP Z400 and HP Z800 Workstations are geared towards users that require the highest computational performance possible. Both systems include 130W CPUs and the HP Z400 and HP Z800 each have specially designed active heatsinks to cool these high end processors. The HP Workstation Engineering Team has leveraged years of experience developing workstations and legacy liquid cooling solutions, along with liquid cooling experience gained from the VooDoo acquisition, to bring liquid cooling solutions to the latest generations of high power processors so they can be cooled more efficiently.

Liquid cooling components liquid cooling solutions (LCS)

There are two categories of LCS. Open-loop systems are designed to be refilled periodically. Closed-loop systems are designed to last the lifetime of the product without needing to be refilled. The LCS for the HP Z Workstations is closed-loop and does not need to be serviced once installed. (Figures 3 and 5).

The large active heatsinks connected to each processor in the air-cooled workstations have been replaced by CPU cooling stations. Each cooling station contains a small reservoir, pump, and CPU cold plate. The cold plates, pump, and liquid coolant are connected to the radiator with custom tubing.

The tubing material was selected after months of research and testing because of its extremely low permeability. In fact, all of the components in the loop are manufactured with materials selected to minimize permeation of the cooling liquid and enable a maintenance-free system. The fluid used to transfer heat is a combination of pure water, anti-corrosion additives, and propylene glycol. Propylene glycol is typically used to de-ice aircraft, or as an ingredient in hand sanitizers and saline solutions.

The heat generated by the CPU(s) is transferred to the liquid as it passes through the cold plates. The heat is transferred again when the liquid passes through the radiator, which is attached to the back panel of the chassis and cooled by the rear chassis fan(s). Compared to active air-cooled heat sinks, the liquid cooling system more efficiently transfers heat from the CPU(s) and this heat is exchanged over a larger external surface area.

Pump design

The pump design includes a mono-directional, brushless DC motor. Simple brushless DC motors are free to rotate in two directions. Limiting the motor to a single direction enables optimization of the pump impeller design. Optimized impeller design allows the pump to move more liquid at lower speeds with less power (2.4W) than other liquid cooling system pumps or heatsink fans.

Cold plate innovation

The HP Z Workstation liquid cooling systems use micro-channel cold plates, the latest innovation in cold plate design. Maximum cold plate efficiency is a delicate balance between maximizing total thermal transfer surface area and minimizing liquid flow impedance. Micro-channel cold plates increased total heat transfer surface by 425% over earlier designs while maintaining the same flow impedance as the earlier designs.

HP Z400 assembly

The HP Z400 liquid cooling loop includes a single CPU cooling station and a 92 mm x 92 mm radiator. The radiator assembly, consisting of a spacer, radiator and fan housing, replaces the rear chassis fan, which is then snapped into fan housing on the upstream side (front) of the radiator. The system also includes a small VR cooling fan to increase air circulation within the chassis and increase the cooling of motherboard components. The VR fan rotates very slowly so as to not add any noise to the workstation.

HP Z800 assembly

The Z800 liquid cooling loop includes two CPU cooling stations and a 184 mm x 92 mm radiator. The HP Z800 heat exchanger, which looks like a small automobile radiator, is mounted outside the chassis behind the chassis exhaust fans. A plastic cover is used to protect the heat exchanger from damage and to maintain consistency with the overall industrial design of the HP Z800. Internally, a second air guide is added under the main airflow guide to cool the motherboard components.

The HP Z800 LCS includes an innovation from HP Workstations R&D that allows the radiator of a closed loop liquid cooling system to be mounted externally. The chassis contains a rear plate that can be removed, allowing the radiator to be mounted externally.

3 In a "typical" configuration reasonably balanced between memory, graphics (and other I/O), and processors.

This allows for the reuse of the system fans and allows for a larger heat exchanger to be used without restricting with access to internal components such as memory connectors. Mounting the radiator on the rear wall of the HP Z800 chassis does not increase the "effective" depth of the computer enclosure, which is determined by the rear external cabling and power cord. In other words, the cables/connectors protrude farther than heat exchanger.

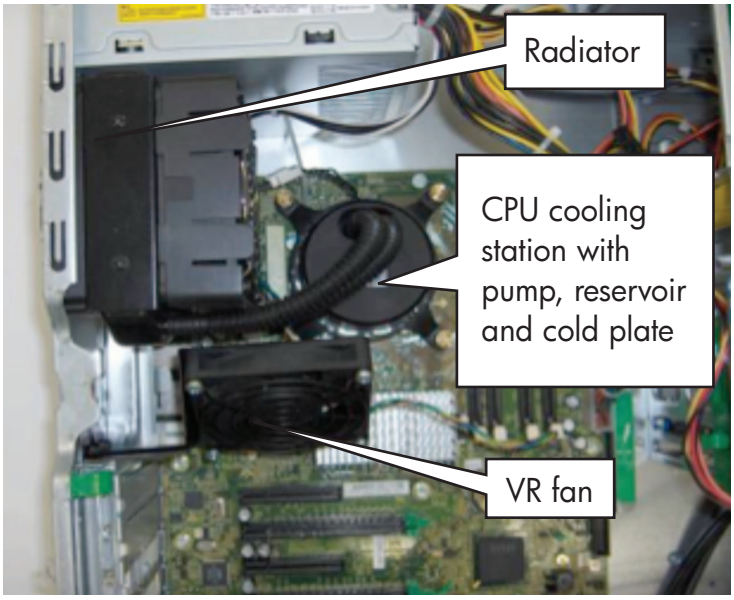

Figure 3. HP Z400 liquid cooling—top view

Figure 4. HP Z400 liquid Cooling—top-front view

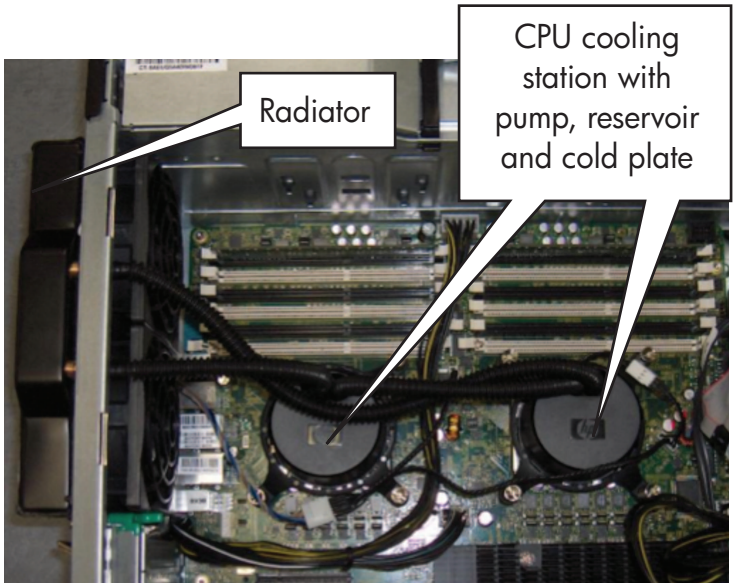

Figure 5. HP Z800 with liquid cooling

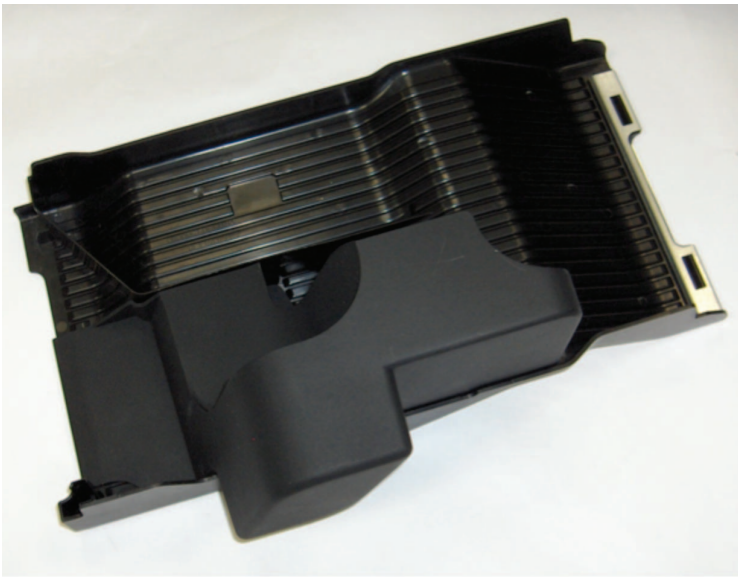

Figure 6. HP Z800 main airflow guide (under-side) with liquid cooling duct attached

Advantages

Acoustics

The reduction in noise is accomplished through the use of a liquid cooling assembly that eliminates CPU heatsink fans and moves heat away from the processor(s) to a heat exchanger—located near the back of the enclosure, improving cooling efficiency—and leveraging the airflow of the rear system fans. This also prevents the hot air exiting the CPU heatsinks from recirculating inside the chassis.

In fact, in a laboratory comparison of results between the liquid cooled and non-liquid cooled systems, found the greatest benefit to be on the 130W processors. See Figures 7 and 8 for more information. There is proportionally less benefit with lower power CPUs. These tests were run using the Intel Power and Thermal Utility[4] in order to run the system at a heavy CPU load.[5]

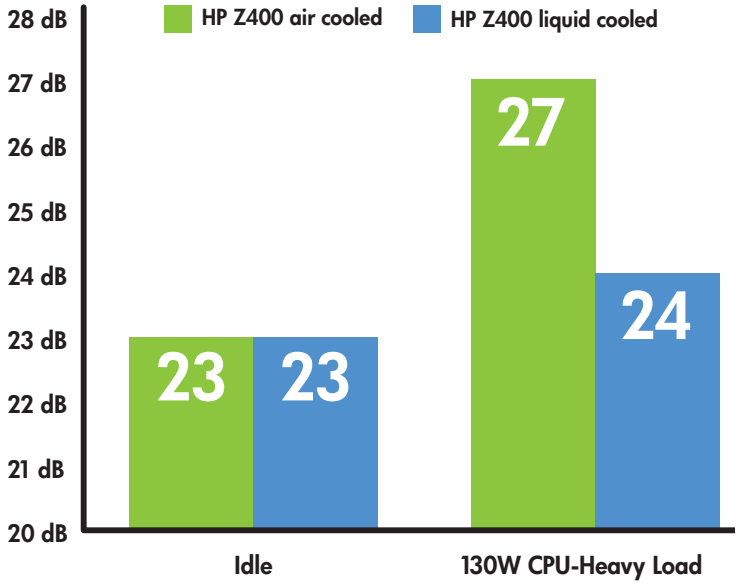

Figure 7. Laboratory comparison of results between air and liquid cooling on the HP Z400[6] (measured in dB)

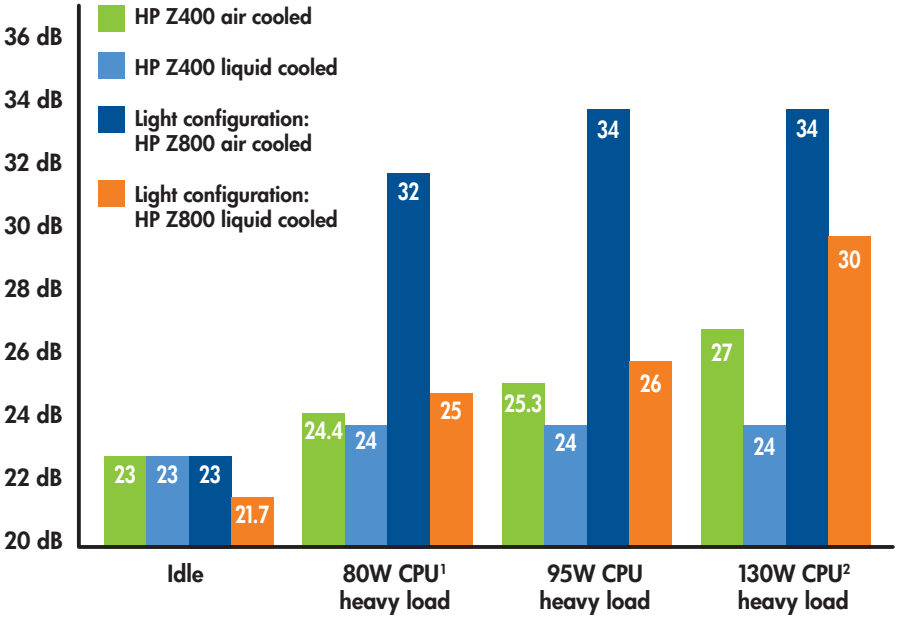

Figure 8. Laboratory comparison of results between air and liquid cooling on the HP Z800[7] (measured in dB)

The reduced noise levels can make users more comfortable and productive, without sacrificing application performance. As you can see, the reduction in acoustic noise is substantial. Recall that dB is sound pressure measured at a specific point, and is expressed by a logarithmic scale—3 dB represents a one-half reduction of the sound pressure.

In addition, studies have also shown that certain kinds of acoustic noise are more distracting than others, especially higher frequencies and irregular modulations[8]. At heavy workloads, the CPU fans ramp to keep the CPU cool, creating a high-pitched tone. Additionally, because the LCS has high thermal inertia, the associated fans do not ramp up and down quickly.

---

4 Intel Power & Thermal Utility (ITU) is an Intel-proprietary CPU load program specifically for testing thermal characteristics.

5 Heavy CPU load is defined as stressing the CPU to 80% of its maximum power level. Note that this corresponds to an extremely heavy workload for third-party applications. Typically these power levels are only reached with code designed to stress a specific CPU architecture.

6 HP Z400 configuration: 1 x NVIDIA Quadro NVS 295, 4 x 1GB, 1 x 160 GB SATA HDD @25C

7 HP Z800 light configuration: 1 x NVIDIA Quadro FX 1800, 12 x 2 GB DIMMs, 4 x 160 GB SATA HDD @25C; Z800 heavy configuration: 2 x NVIDIA Quadro FX 4800, 12 x 4 GB (or 8 GB) DIMMs, 4 x 300 GB SATA HDD @25C

8 Source: http://www.osha.gov/dts/osta/otm/noise/health_effects/index.html

System requirements

As you can see, a substantial reduction in acoustic noise may be realized by employing liquid cooling technology in the HP HP Z400 and HP Z800 workstation. However, some configurations may not benefit from liquid cooling.

Some notes to keep in mind on the system requirements using the liquid cooling implementation in the HP Z400 and HP Z800 are:

- Liquid cooling adds a small amount of cost to the system. Therefore, you may see a higher price in return for lower noise levels and/or higher performance.
- Liquid cooling provides a distinct acoustic advantage in systems where processor cooling is the dominant noise source. For system configurations where other components, such as memory fans or hard drives are the dominant noise source, liquid cooling may provide little or no advantage over air cooling. Configurations with low power processors will also show little advantage with liquid cooling. Configurations with any of the following components may show little advantage unless your CPU power levels are consistently very high (with 130W thermal design power processors):
  - Two or more high capacity 15K SAS hard disk drives
  - CPU thermal design powers (TDP) less than 95W
  - Over four SATA or SAS hard disk drives (HP Z800)
  - More than 96 GB of memory (HP Z800)
  - Single or dual NVIDIA Quadro FX4800 or FX5800 graphics cards (HP Z800)
  - Unknown (non-HP configured) graphics cards (HP Z800)

Conclusion

As a technology leader, HP continues to innovate in the area of thermal management to improve the end user experience. As workstation power consumption continues to increase, the demand for liquid cooling is likely to extend beyond CPUs to other components in the system. HP is using its extensive experience in thermal management and workstation engineering to develop high-performance, quiet systems for today, and new innovations for tomorrow's more powerful systems.

For more information

Useful URLs

Information about HP Workstations:
www.hp.com/go/workstations

A useful resource for explaining sound measurements
http://en.wikipedia.org/wiki/sound

HP offices and contact information

For the HP sales office nearest you, please refer to your local phone directory, or call the HP regional office listed below.

Corporate and North American headquarters
Hewlett-Packard
3000 Hanover Street
Palo Alto, CA 94304-1185
Phone: (650) 857-1501
Fax: (650) 857-5518

Regional headquarters

Latin America
Hewlett-Packard
Waterford Building, 9th Floor
5200 Blue Lagoon Drive
Miami, Florida 33126 USA
Phone: (305) 267-4220

Europe, Africa and Middle East
Hewlett-Packard
Route du Nant-d'Avril 150
CH-1217 Meyrin 2
Geneva, Switzerland
Phone: (41 22) 780-8111

Asia Pacific
Hewlett Packard Asia Pacific Pte. Ltd.
138, Depot Road 5th floor
Singapore 109683
Phone: +65 62753888

To learn more, visit www.hp.com

4AA1-7082ENW June 2010